PERIMETER PROTECTION GROUP

Ezi Security Systems
SERIOUS SECURITY IS EZI

QUICK FOLDING GATE ENTRAQUICK II SINGLE LEAF

DATASHEET

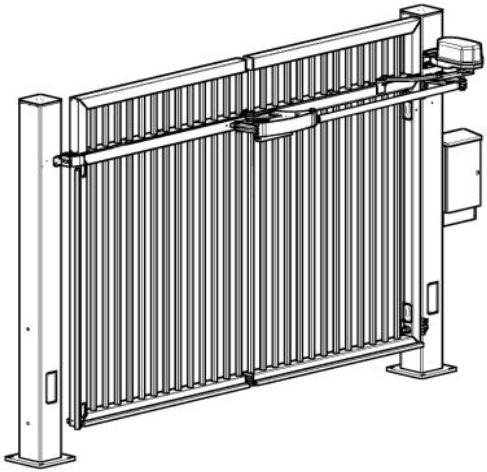

Design:	Single leaf Quick Folding Gate II with folding leaf, drive post, receiving post,
Clear Width (CW):	2000 mm – 5000 mm in 500 mm increments
Distance between posts:	CW + 400 mm
Gate height:	2050 mm incl. 100 mm ground clearance 2550 mm and 3050 mm incl. 100 mm ground clearance (only for CW ≤ 4000 mm)
Gate infill:	Bar infill made of square hollow section SHS 30 with max. 120 mm clear distance
Frame profile:	Square hollow section SHS 100x5 (inner/leading gate leaf) Square hollow section SHS 100x4 (outer/trailing gate leaf)
Drive posts:	Square hollow section SHS 260x10 with base plate to bolt on
Opening direction: (viewed from the outside)	Left hand, opening inwards or right hand, opening inwards (standard) Left hand, opening outwards or right hand, opening outwards
Lowered foundation:	Top edge of foundation 200 mm below finished floor level
Operating speed:	Max. 0.5 m/s (depending on CW)
Drive:	Electric drive 0.37 kW, 3~ 230 V Δ, 50 Hz
Emergency operation: (during power failure)	By manual release of drive arm
Supply voltage:	230 V (1Ph + N + PE), 50 Hz
Control unit:	Automatic control (maintained command) WE-Tronic II with frequency converter, control voltage 24 V DC

PERIMETER PROTECTION GROUP

Ezi Security Systems
SERIOUS SECURITY IS EZI

QUICK FOLDING GATE ENTRAQUICK II SINGLE LEAF

DATASHEET

Control box	HxWxD = 600x400x210 mm, IP66 • with rain cover, mounted to drive post (standard) • for wall installation inside a building, max. distance 50 m (optional) • in separate outdoor cabinet HxWxD = 1200x600x400 mm incl. 200 mm high socket, max. distance 50 m (optional)
Safety devices:	4 nos. safety edges
	Light beam between drive post and receiving post at car and HGV height as well as in separate light beam posts on the side of the folded gate leaf at car height
	Active infrared-presence detector (for EntraQuick with 2050 mm gate height)
Certification:	Type-tested by notified body TÜV Nord
Control devices (Standard)	1 no. key switch OPEN / STOP / CLOSE in drive or receiving post
Control devices (Optional):	:Induction loops, additional light beam in light beam posts at HGV height, additional key switch OPEN/ CLOSE / STOP, key switch OPEN / CLOSE / EMERGENCY STOP, key switch ON / OFF for automatic closing etc., key switch partial opening, key switch fire brigade, remote control with hand held transmitter, table top push button, timer, code key pad, card reader, intercom system
Signalling devices (Optional):	Flashing permanent light or rotating beacon (LED), LED spot light, traffic light
Options:	Serrated top edge, steel spikes (from 2550 mm gate height), alternative floor recess for lowered foundation up to 200 mm, key safe, fence connection systems, special infills on request
Weight	Approx. 1100 kg for maximum applicable dimension
Finish (Standard)	Hot-dip galvanised finish: Hot-dip galvanised and powder-coated in RAL 6005 moss green, RAL 7016 anthracite grey, RAL 7030 stone grey, RAL 7035 light grey or RAL 9010 pure white
Finish (Optional):	Hot-dip galvanised and powder-coated in other RAL colours
Temperature range:	Control unit: -10 °C … +50 °C; Drive: -45 °C … +50 °C